QUAN.	DESCRIPTION	MATERIAL	PART NUMBER	HEAT TREATING OR REMARKS	ITEM
32	BOLT ø1 1/8–7 x 3 3/4"	A325	W/ C.W. & NUT	R.W. TO W12 COLUMN 71	1
32	BOLT ø3/4–10 x 3"	A325	W/ C.W. & NUT	R.W. TO W8 COLUMN 26	2
4	HHCS ø1 1/4–7 x 10"	GR. 5	W/ F.W. & NYLOC NUT	A–BRACE 20	3
56	WEDGE ANCHOR ø3/4 x 8 1/2"	SIMPSON	WA75812	60	4
2 LOT	60# RAIL x 235'–0"		W/ HOOK BOLTS & SPLICE BARS	10,800	5
1 LOT	90 AMP MAINLINE x 236'–6"	MAGNETEK	"8" BAR	480	6
98	HHCS ø3/8–16 x 1 3/4"	GR. 2	W/ F.W., L.W., & NUT	MAINLINE BOLTS 11	7
10	L6x3 1/2x3/8 x 0'–8"	A36		SOUTH TIE–BACK NORTH T.B. CONX. 78	8
2	C6x8.2 x 20'–0"	A36		NORTH TIE–BACK FIELD–CUT 328	9
.	.	.	.	. .	10

REQ'D. 1
WT. = 102,658 lbs.

QUAN.	DESCRIPTION	MATERIAL	PART NUMBER	HEAT TREATING OR REMARKS	ITEM
1	SOUTHWEST RUNWAY BEAM		19517–B1	8,293	B1
2	SOUTH RUNWAY BEAM		19517–B2	16,568	B2
1	SOUTH RUNWAY BEAM		19517–B3	8,284	B3
1	SOUTHEAST RUNWAY BEAM		19517–B4	8,177	B4
1	NORTHWEST RUNWAY BEAM		19517–B5	8,293	B5
3	NORTH RUNWAY BEAM		19517–B6	24,852	B6
1	NORTHEAST RUNWAY BEAM		19517–B7	8,177	B7
2	WEST COLUMN		19517–C1	1,906	C1
8	W8 COLUMN		19517–C2	3,776	C2
2	EAST COLUMN		19517–C3	2,018	C3
2	LATERAL A–BRACE		19517–BR	322	BR
2	LATERAL BRACE BASE PLATE ASSEMBLY		19517–BP	118	BP

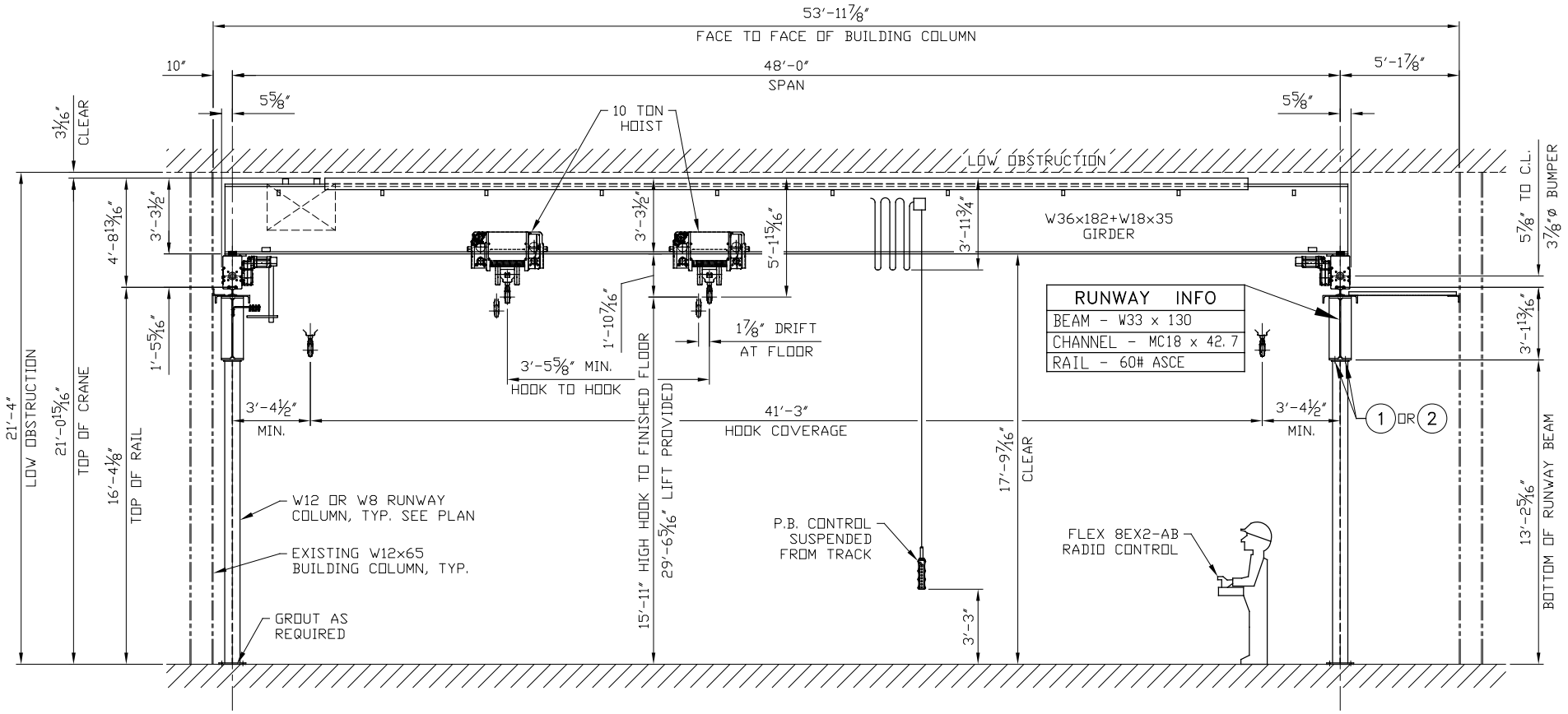

SECTION - LOOKING WEST

SCC CRANE# 19517-1
20 TON CAPACITY

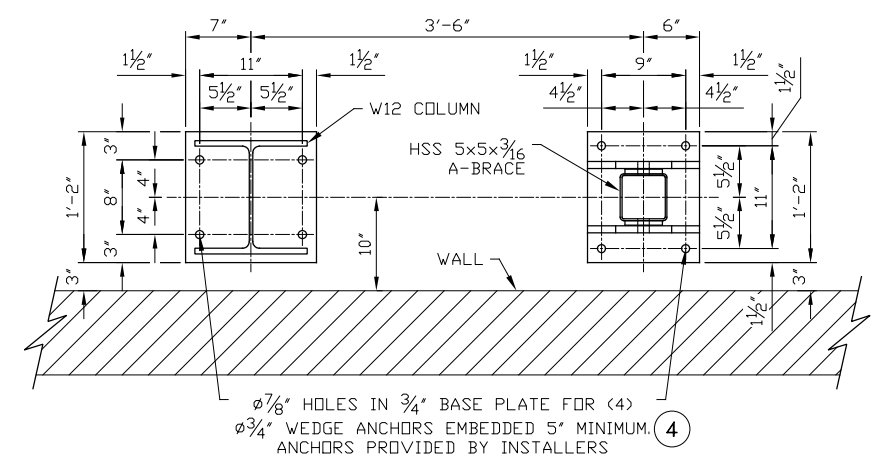

W12x65 & A-BRACE BASE DETAIL AT EAST END

W12x65 COLUMN BASE DETAIL AT WEST END SIMILAR EXCEPT NO A-BRACE

PROPER FOOTING OR SUITABLE FLOOR BY OTHERS
MAXIMUM COLUMN LOAD = 74,500#
MAXIMUM A-BRACE LOAD = ±20,400#

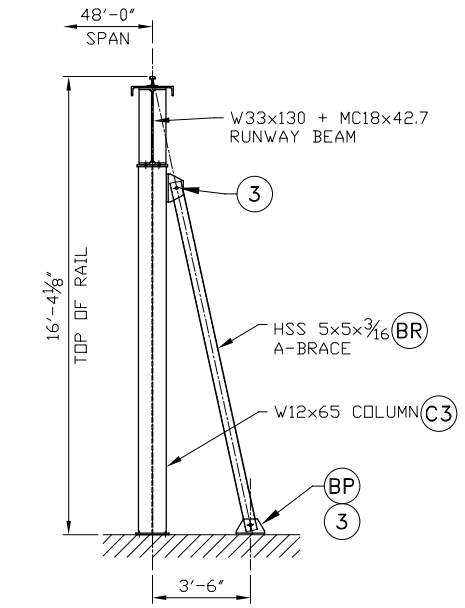

A-BRACE DETAIL

AT EAST END ONLY

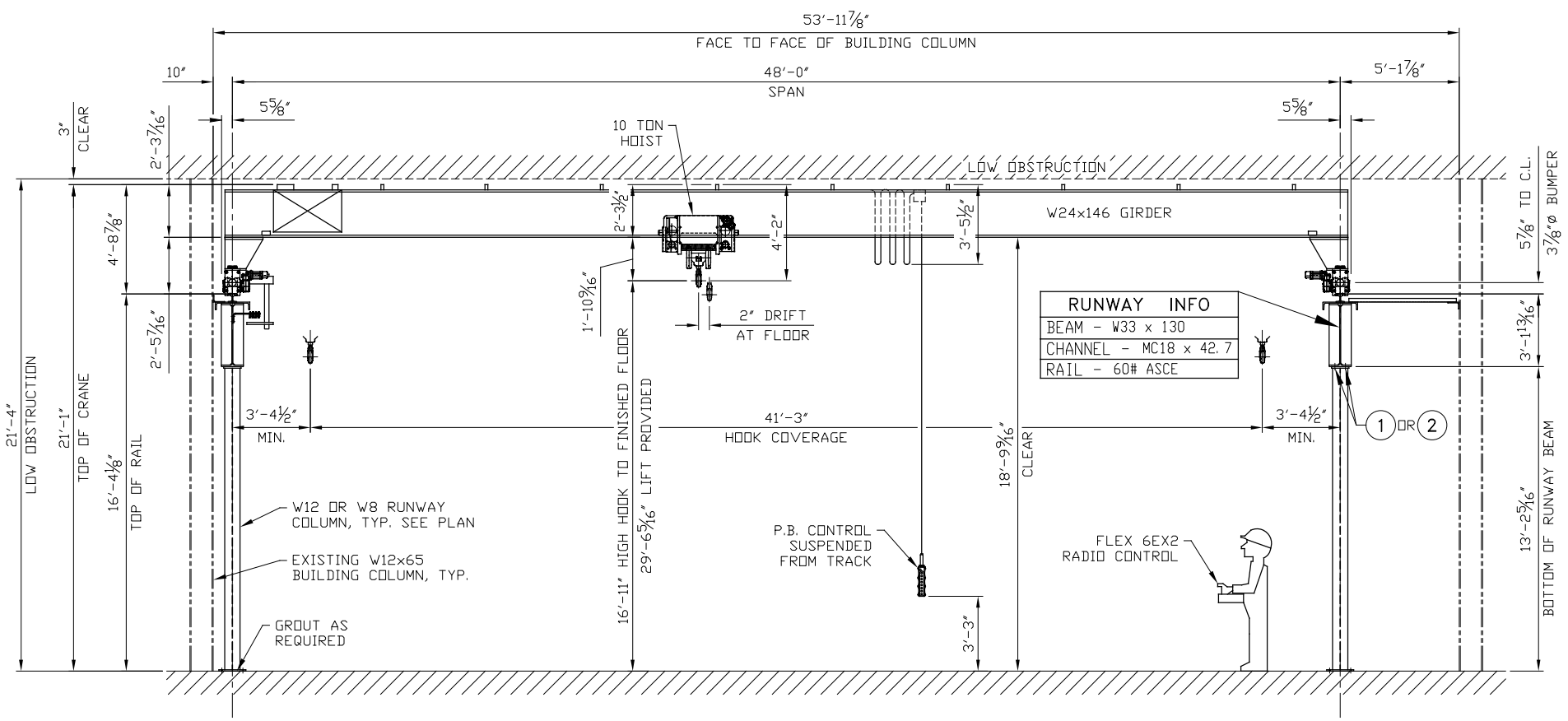

SECTION - LOOKING WEST

SCC CRANE# 19517-2
10 TON CAPACITY

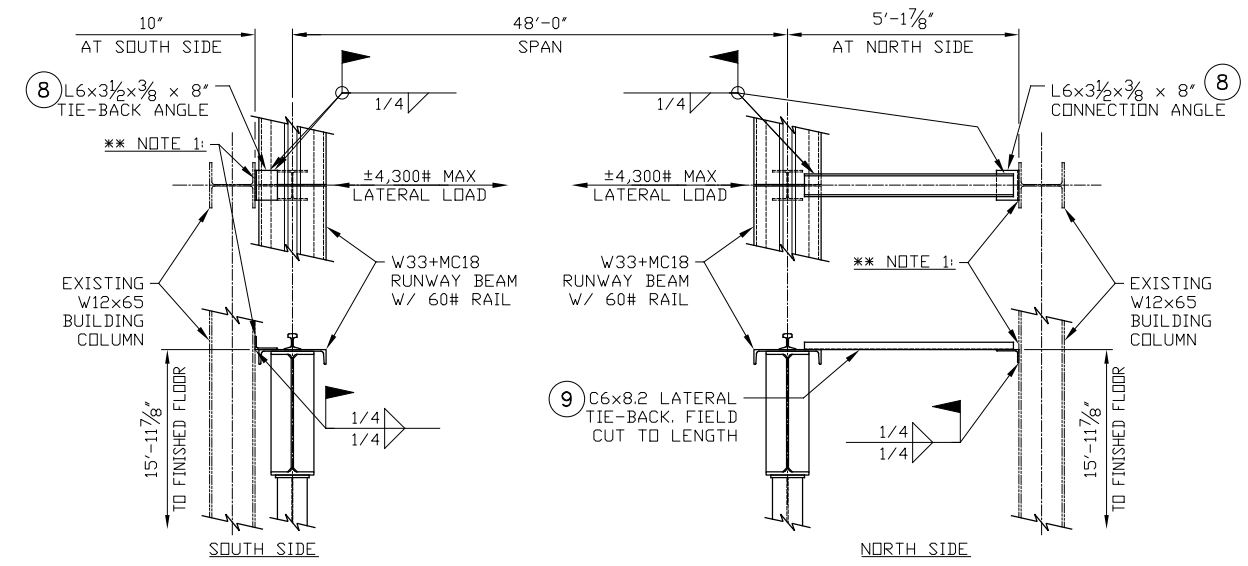

TIE-BACK DETAIL

** NOTE 1: CUSTOMER TO PROVIDE CLEAR ACCESS TO ALL BUILDING COLUMNS AT TOP OF RUNWAY ELEVATION FOR RUNWAY TIE–BACK CONNECTION. THIS APPLIES TO ALL BUILDING COLUMNS ADJACENT TO CRANE RUNWAY COLUMNS EXCEPT FOR THE EAST END OF THE RUNWAY WHERE A–BRACED COLUMNS WILL BE PROVIDED.

THIS RUNWAY TRANSMITS THE LATERAL CRANE LOAD INTO THE BUILDING COLUMNS. THE CUSTOMER IS AWARE THEY ARE RESPONSIBLE FOR THE INCREASED LOADING TO THE BUILDING STEEL. WE RECOMMEND YOUR BUILDING DESIGN ENGINEER REVIEW THESE ADDITIONAL LOADS TO DETERMINE IF THEY ARE WITHIN ACCEPTABLE LIMITS WITHOUT AFFECTING THE BUILDING INTEGRITY.

CUSTOMER: TITAN INC.

Superior Crane Corp.
P.O. BOX 1464 – WAUKESHA, WI 53187–1464
(262) 542–0099 FAX # (262) 542–7767

CRANE AND RUNWAY ASSEMBLY PLAN
20,000# & 40,000# CRANE CAPACITY
40,000# RUNWAY CAPACITY

ORDER NO.	DWG NO.	REV
.	19517-3	.

DRAWN: AR	DATE: 12/3/18	SIMILAR TO: .
APPROVED: BGM	DATE: 12/3/18	SHEET 2 OF 2

REV.	DESCRIPTION	DATE	APPROVED

ALL INFORMATION ON THIS DRAWING IS CONFIDENTIAL AND NOT TO BE USED OR REPRODUCED FOR ANY PURPOSE WITHOUT WRITTEN AUTHORIZATION FROM SUPERIOR CRANE CORP.